CMS ACOUSTIC SOLUTIONS

# SoundDeck

Resilient Overlay Floor System for RD Concrete Sub-floors

Regupol®

Technical Information Sheet

## Benefits

- ***Approved as Doc E compliant for conversion and new build standards***
- ***Approved for robust standard detail FFT5***
- ***Ideal for precast and beam & block floors***
- ***Minimises construction height***

## Description

**Regupol® SoundDeck** is a resilient overlay shallow platform floor system (Type FFT5) for use with Robust Detail floor construction types E-FC-1, E-FC-2 and E-FS :1.

**Regupol® SoundDeck** has been tested and is certified to provide the necessary acoustic insulation required for compliance with Part 'E' of the building regulations for these RD floor types.

**Regupol® SoundDeck** panels comprise a resilient layer pre-bonded to 18mm or 22mm T & G flooring grade chipboard.

## Specification

| | |
|---|---|
| Size: | 2400mm x 600mm TG4 |
| Thickness: | 26 or 30mm |
| RD compliance requirement dB $\Delta L_w$: | 17dB |
| SoundDeck rating dB $\Delta L_w$ | 19dB |

*Measured in accordance with BS EN ISO 140-8:1998*

## Accessories

**Regupol® SoundDeck Flanking Band** must be used with **Regupol® SoundDeck** to ensure compliance.

## Installation

- Ensure that concrete floors are level and clean.
- Grout all joints between concrete planks.
- Fill all voids between walls and floor.
- Butt planks tightly together.
- Install **Regupol® SoundDeck** flanking band around the perimeter of the floor to isolate flooring boards from walls and skirtings.

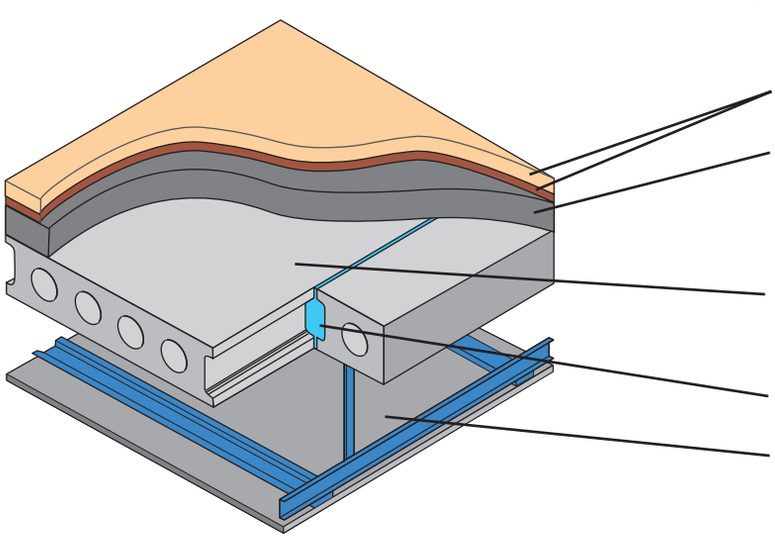

The sketch shows FFT5 type floating floor treatment and CT3 type ceiling treatment.

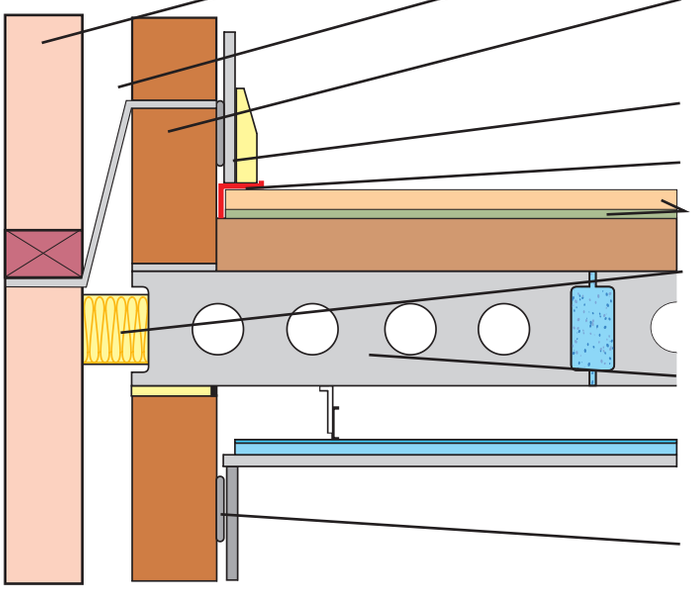

Masonry outer leaf

External wall cavity (min 50mm)

Inner leaf (min 100mm) concrete block (1350kg/m$^3$ to 1600kg/m$^3$ or 1850 - 2300kg/m$^3$)

Nominal 8kg/m$^2$ gypsum-based board or 13mm plaster

10mm (min) **Regupol® SoundDeck Flanking Band**

**Regupol® SoundDeck**

CMS Acoustic Cavity Closer unless it is fully filled with insulation

Concrete planks to be built into wall:
- wall must not be continuous between storeys
- planks must not abut inner leaf
- all voids between planks and blockwork filled with mortar or flexible sealant

Continuous horizontal ribbon of adhesive

## Installation Service

In addition to supply of this product CMS Acoustic Solutions offers a competitively-priced installation service anywhere in the UK. Use of our service ensures that installation is performed to the highest standards by tradesmen fully experienced in the specialist skills of fitting acoustic materials correctly. For further details contact our technical team on 01925 577711.

E-mail: info@cmsacoustics.co.uk
Web: www.cmsacoustics.co.uk

Northern Office: 4a, Eagle Park, Eagle Park Drive, Warrington WA2 8JA
Tel: 01925 577711 Fax: 01925 577733

Southern Office: Duguard House, Peartree Road, Colchester CO3 0UL
Tel: 01206 216690 Fax: 01206 577954

IMPORTANT: Directions for use are given for guidance only and are not intended to form part of any contract. They should be varied or adapted to suit your particular materials or conditions of use. Goods supplied by the company are made to approved standards from the highest quality raw materials but no warranty or guarantee is given as to their suitability for any particular purpose or application, and no liability is accepted for any loss or damage arising directly or indirectly from the use of the Company's products irrespective of any information given to us as to intended use of such products. It is therefore recommended that prospective users should test a sample of this product under their own conditions to satisfy themselves that the product is suitable for the purpose intended.

CADS 6009 - 3 1005 © CMS Acoustic Solutions Ltd 2005

Regupol® and Regufoam® are registered trade marks of BSW GmbH